Swing block - BMM

A practical block for rope or wire that can be opened at the top. The body is galvanized, while the sheaves are made of either nylon or galvanized steel.



Material	Galvanized steel

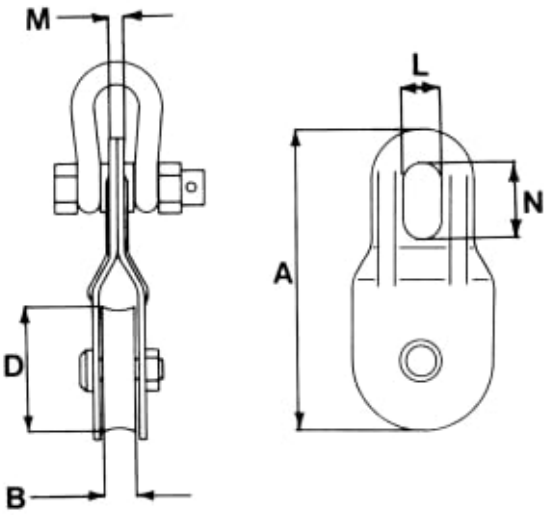

Read more about the product here:
https://john-dahle.no/product?number=BMM-Svingblokk